SIBYL COLEFAX & JOHN FOWLER

Billy Baldwin - Wall Light

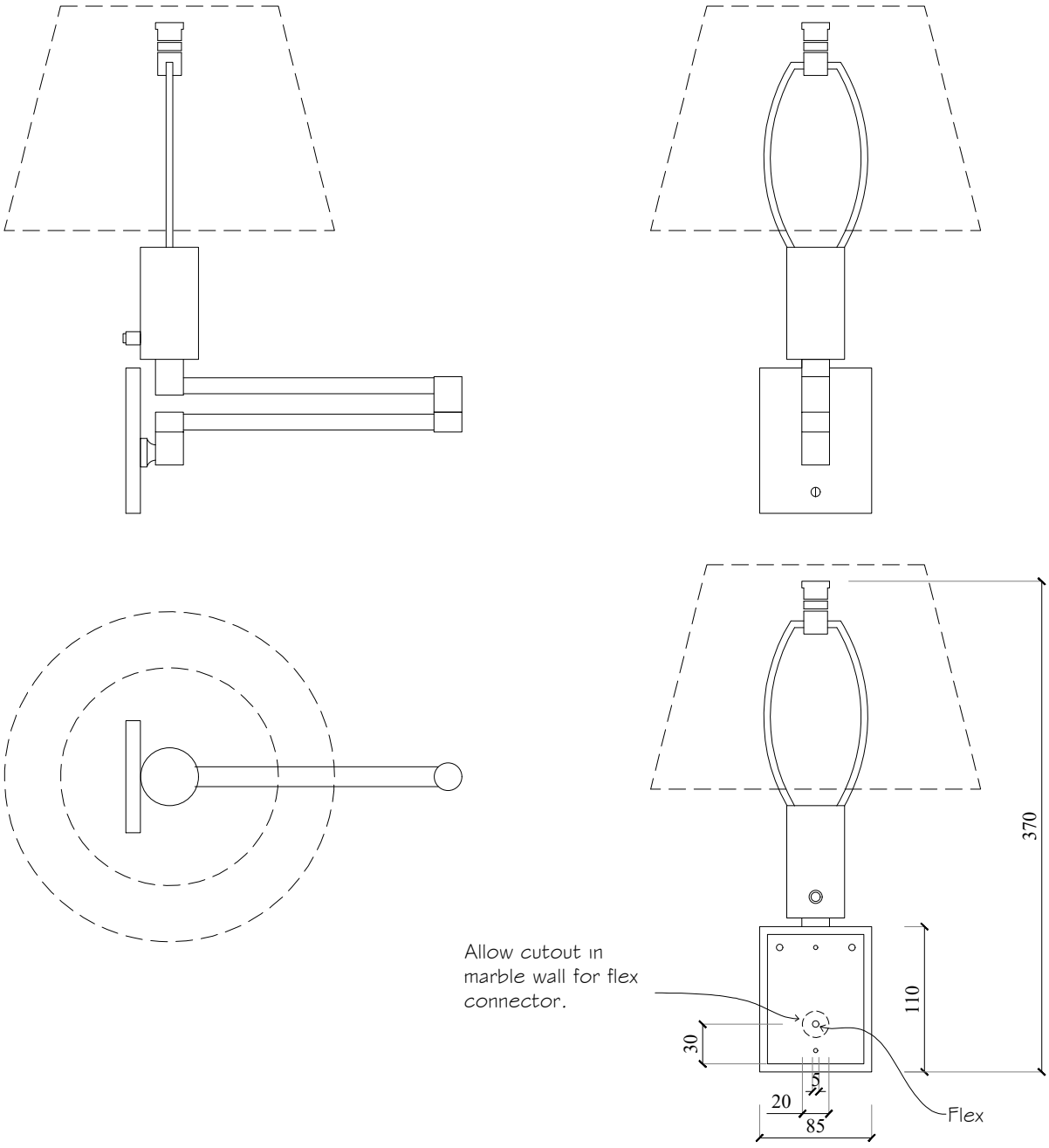

Dimensions

Height: 18 cm (7”)
Width: 9.5 cm (3.75”)
Fully extended: 47 cm (18.5")

Technical Details

Fitting: x1 BC Bulb, E14 upon request
IP Rating: IP20
Weight: 1.2 kg
Dimmable

89 – 91 PIMLICO ROAD, LONDON SW1W 8PH
TELEPHONE 020 7493 2231